REVISIONS				
SYM	DESCRIPTION	DRAWN / APPD.	DATE / DATE	FILMED
B	REDRAWN & CHANGED FERRITE STEM ASSM.	SCHMITZ / MAY	6-16-72 / 6-16-72	

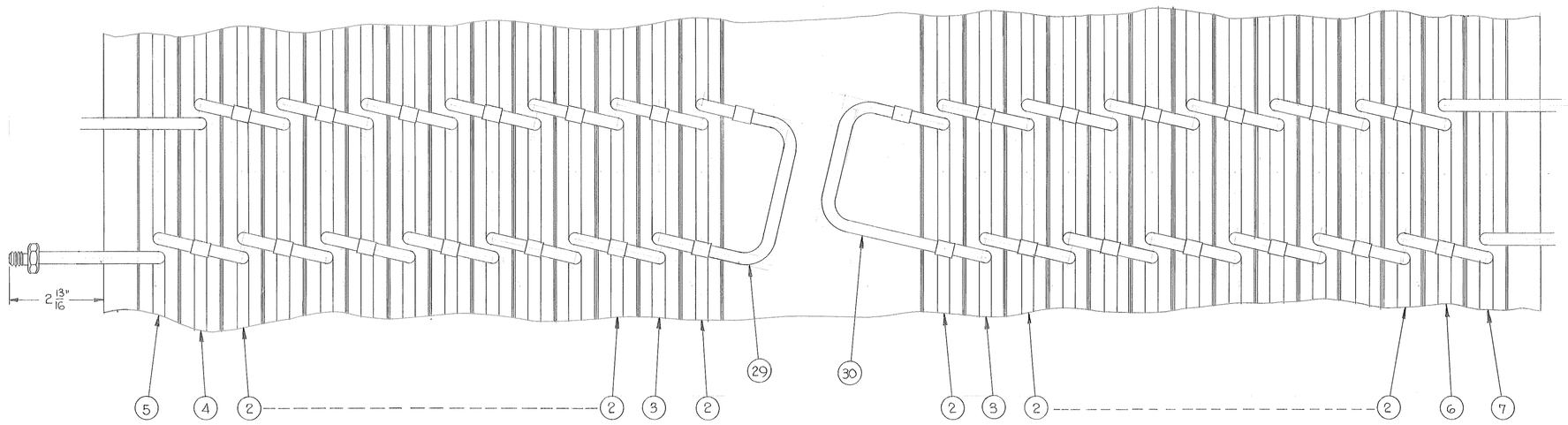

VIEW C-C
1/2 SIZE

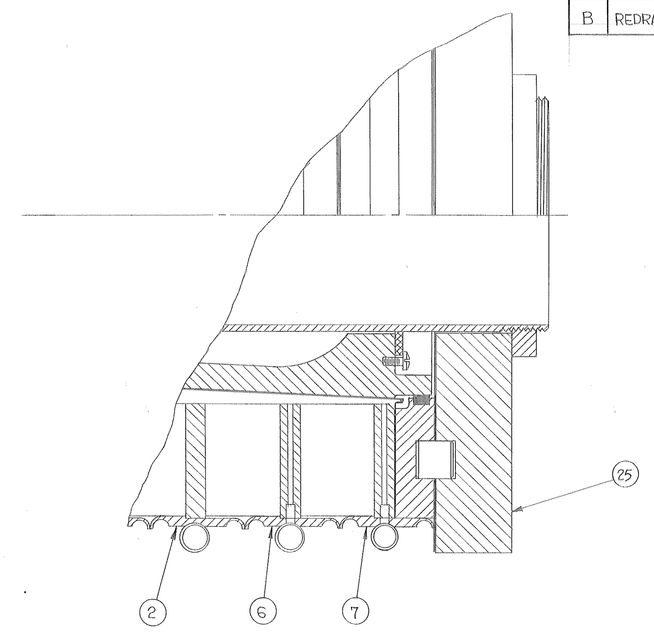

BACK END

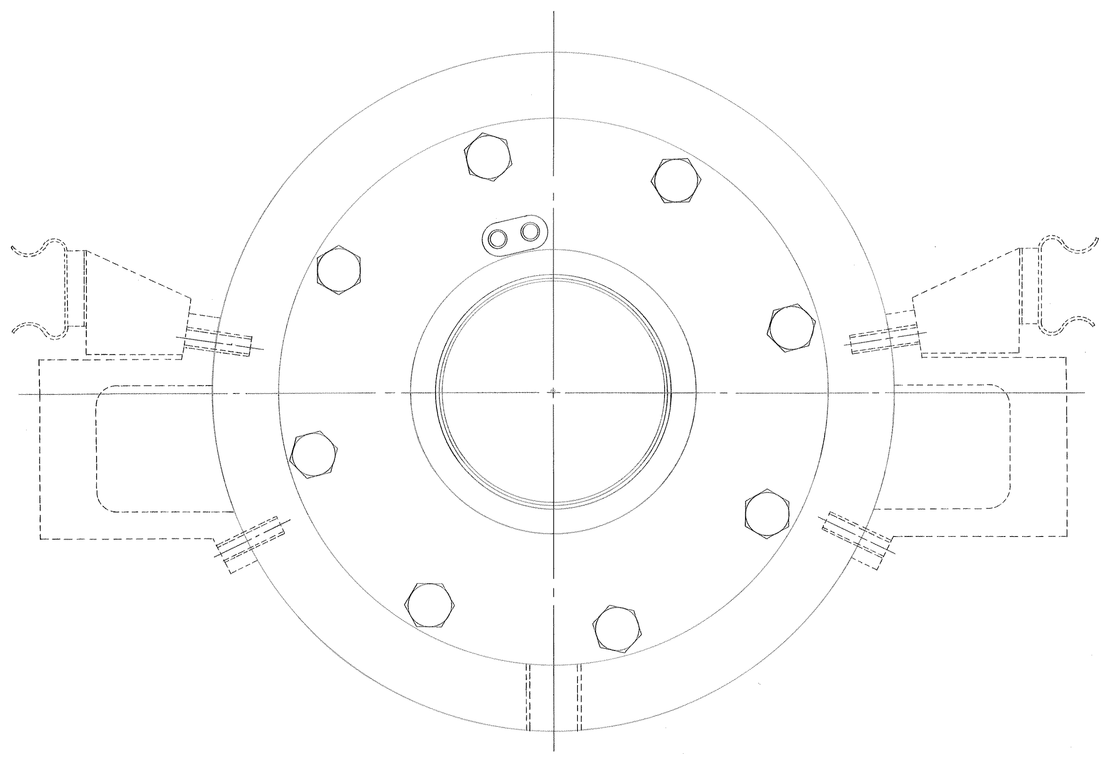

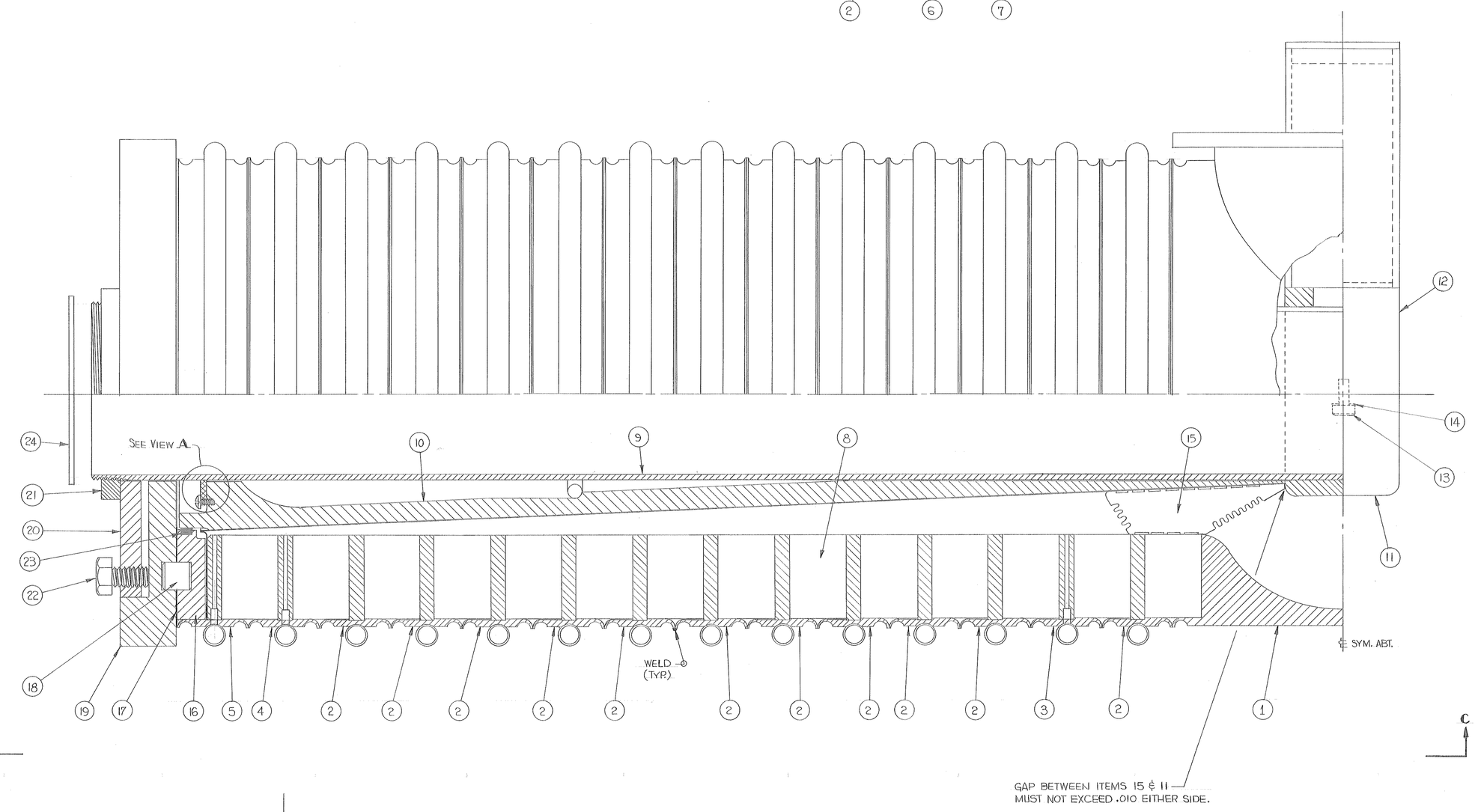

GAP BETWEEN ITEMS 15 & 11
MUST NOT EXCEED .010 EITHER SIDE.

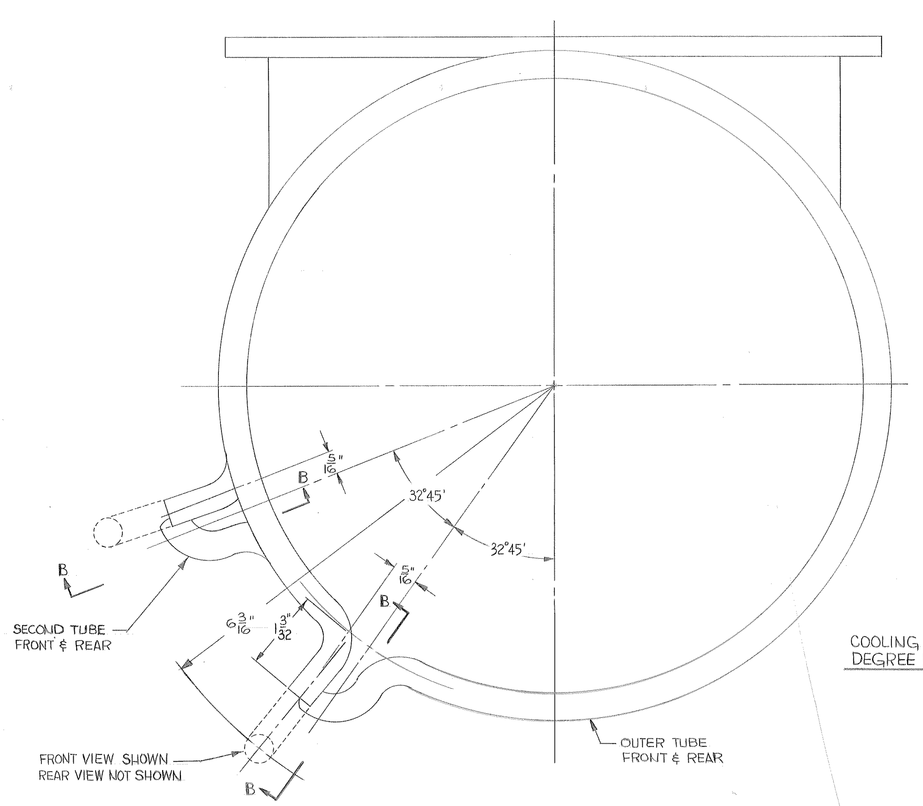

COOLING TUBE WELDMENT
DEGREE FROM CENTER LINE

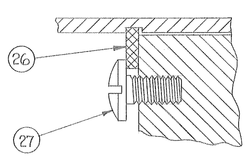

VIEW A
2 X SIZE

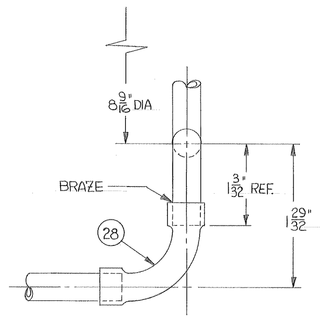

SECTION B-B

ITEM NO.	PART NO.	DESCRIPTION	QTY. REQ.	ITEM NO.	PART NO.	DESCRIPTION	QTY. REQ.	ITEM NO.	PART NO.	DESCRIPTION	QTY. REQ.
				24	MB-5759	INSULATING WASHER	2	12	MC-5377	STEM WELDED UNIT	1
				23		O RING # AN6230B-26, 4.734 I.D. .139 WIDTH NEOPRENE	2	11	MC-5035	BOTTOM STEM CLAMP	1
				22		3/8-16 X 5/8" LG. S.S. HEX. HD. CAP SCREW	8	10	MD-22284	COOLING CONE ASSEMBLY	2
				21	MB-5485	END LOCK NUT	2	9	MC-5481	CENTER TUBE	1
				20	MC-5488	TENSION PLATE	1	8	EA-5000	FERRITE TOROID	28
				19	MC-5486	SUPPORT FLANGE	1	7	MB-22645	FERRITE STEM ASSM. "B" W/ CHAMFER	1
30	MB-21128	JUMPER (SWAGED)	1	18	MB-5484	ALIGNMENT PIN	8	6	MB-22644	FERRITE STEM ASSM. "B" W/O CHAMFER	1
29	MB-21127	JUMPER (STRAIGHT)	1	17	MC-5483	KAPTON WASHER	2	5	MB-22643	FERRITE STEM ASSM. "C" W/ CHAMFER	1
28		MUELLER BRASS 90° ELL. STYLE WE-500L # W-2716	4	16	MC-22283	SPACER	2	4	MB-22642	FERRITE STEM ASSM. "C" W/O CHAMFER	1
27		#10-32 X 3/8" LG. S.S. SOC. HD. SCREW	4	15	MD-22287	GAS COVE SEAL	2	3	MB-22281	FERRITE STEM ASSEMBLY	2
26		TRUARC RETAINING RING #5100-325H	2	14		.375 O.D. X .190 I.D. X .030 BELLEVILLE WASHER	2	2	MB-5826	FERRITE STEM ASSEMBLY	22
25	MC-5487	BLANK SUPPORT FLANGE	1	13		#10-32 X 1/2" LG S.S. SOC. HD. SCREW	2	1	MD-5803	TUNER CENTER SECTION	1

ITEM NO.	PART NO.	DESCRIPTION	QTY. REQ.

PARTS LIST

UNLESS OTHERWISE SPECIFIED					
FRACTIONS	DECIMALS	ANGLES	ORIGINATOR	J. O'MEARA	3-7-72
±	±	±	DRAWN	T. L. SCHMITZ	6-16-72
			CHECKED		
1. BREAK ALL SHARP EDGES 1/64 MAX.			APPROVED	J. O'MEARA	6-16-72
2. DO NOT SCALE DWG.			APPROVED		
3. DIMENSIONING IN ACCORD WITH USASI Y14.5 STD's.			USED ON		
√ MAX. ALL MACHINED SURFACES			MATERIAL-		

NATIONAL ACCELERATOR LABORATORY
U.S. ATOMIC ENERGY COMMISSION

BOOSTER ACCELERATOR RF SYSTEM
BOOSTER CAVITY
FERRITE TUNER ASSEMBLY MARK II

SCALE	FILMED	DRAWING NUMBER	REV.
FULL		0334.05-ME-22280	B

BRUNING 40-107